microlink®
people focused solutions

ELECTRIC SIT-STAND DESK

INSTRUCTION MANUAL

EY HAT 2M 2S E2 V03 EY
HAT 2M 3S E3 V03



CAUTION /INFORMATION



Please ensure there are no obstructions above and below the desk so that the desk can move freely. Neither the manufacturer nor the seller will be held responsible for any injury or property damage that may occur from inappropriate use of this product.

WARNING – Pinch Point

Keep hands and fingers clear.

Keep children away from electric height-adjustable desks, control units and handsets. There is a risk of injury and electric shock.

Keep all electrical components away from liquids.

Do not sit or stand on the desk frame. Do not crawl or lie under the desk frame.

Do not place any objects taller than 20" underneath the desk.

Do not open any of the components - the Legs, Control Box, or Switch. There is a danger of electric shock.

This product is designed with a duty cycle of 10% (2 min. on, 18 min. off).

In the event of a power outage or if the power cord is unplugged, a manual reset may be necessary-see USE section.

Ensure the lengths of the power cords connected to your devices are accounted for when operating the desk. Monitors, computers, speakers, anything with a cord that is not long enough for the desk's range of motion could be pulled down or have its wires broken. Items pulled off the desk may cause other items to fall.

USE / LABILITY

This height adjustable desk has electric motors and is designed for use in dry work areas only.

The desk height is adjustable so that it can be positioned at the most ergonomically suitable height.

Any other use is at user's risk.

Under no circumstances does the manufacturer accept warranty claims or liability claims for damages caused from improper use or handling of the desk frame.

IMPORTANT:

Any user or installer of the desk must study this manual carefully

TOOLS



4mm Allen
Wrench (included)

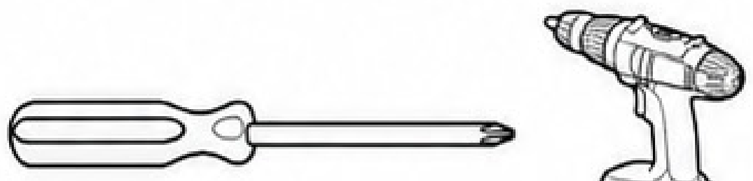

Phillips Head Screwdriver

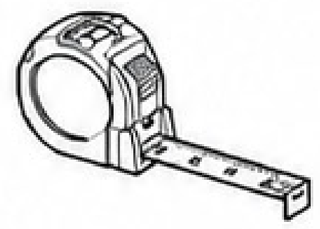

Tape Measure

Part List

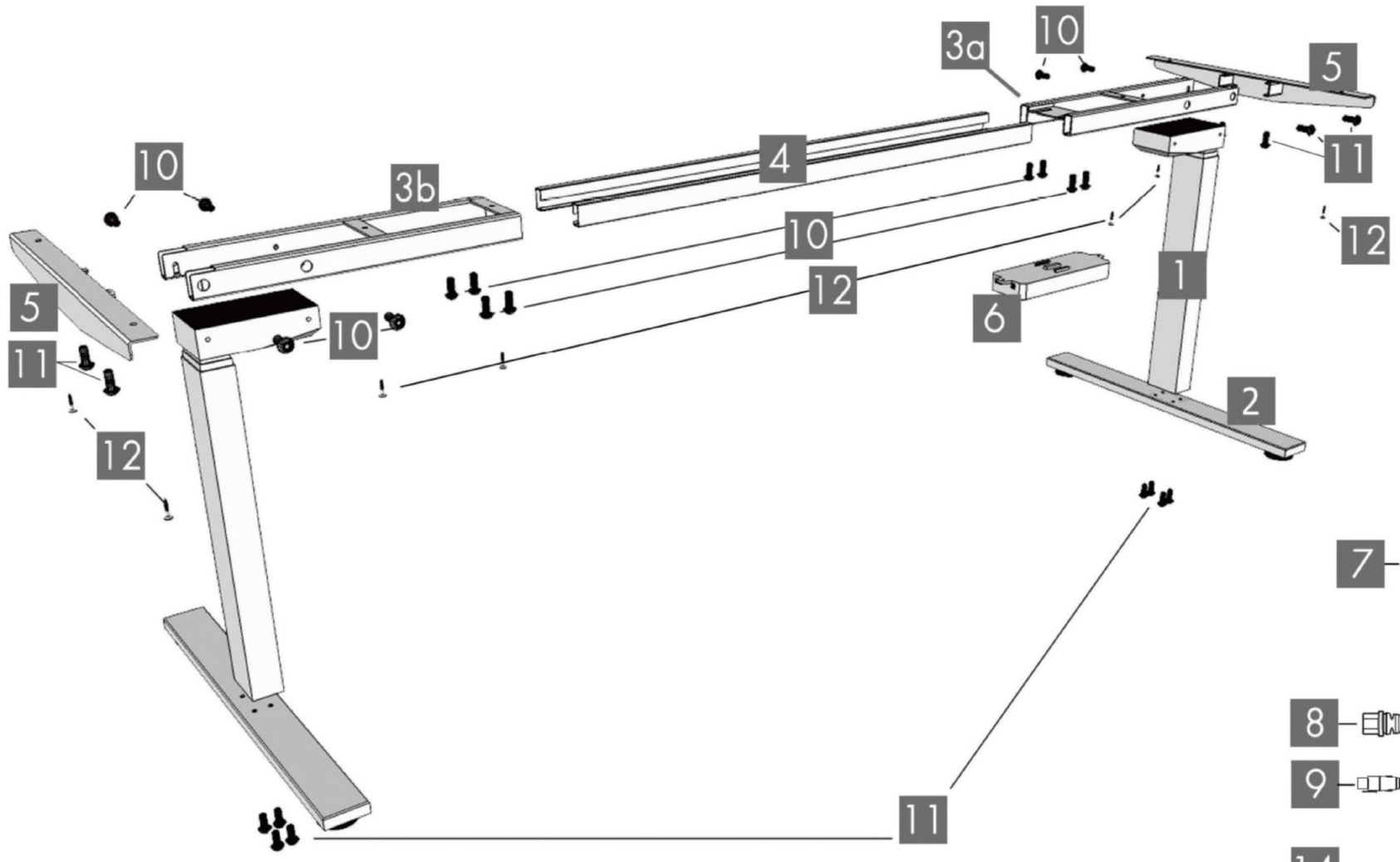

Part		Qty	Part		Qty
1	Leg	2	8	Power Cord	1
2	Foot	2	9	Cable (1.3m)	1
3a	Frame End-CB	1	10	M6x10 Machine Screw	16
4b	Frame End	1	11	M6x14 Machine Screw	12
4	Center Rail	2	12	M5x20 Wood Screw	7
5	Side Bracket	2	13	M5x16 Wood Screw	2
6	Control Box	1	14	Cable Clip	10
7	Handset	1			

Step 1

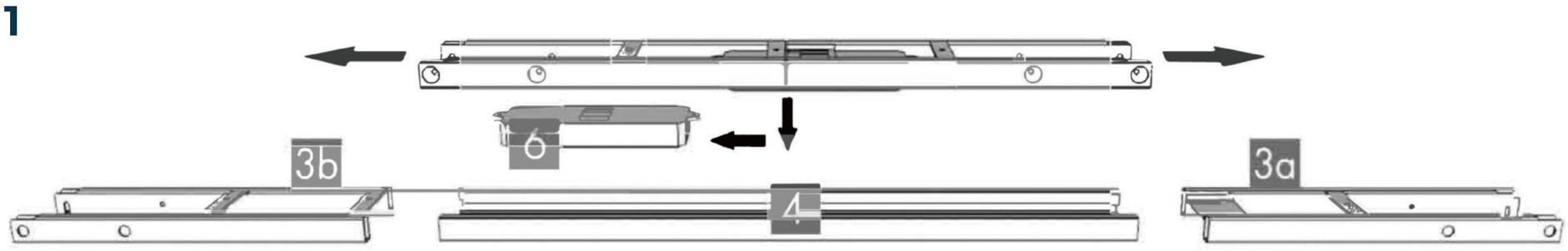

Lay out all components and hardware to ensure that you have all the components and hardware listed on the parts page.

Slide the Control Box (part 6) off the Frame End-CB (part 3a) and set aside. Fully separate Frame End (part 3b) from Frame End-CB (part 3a). You will find the Center Rails (part 4) inside.

Step 2

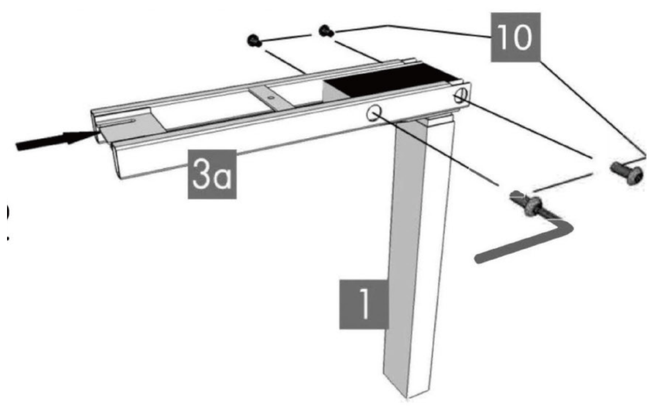

Place one of the legs (part 1) into the Frame End-CB (part 3a) ensuring that the bar (arrow) is on “top” in relation to the leg (part 1).

Line up the holes on the leg (part 1) with the holes on the Frame End-CB (part 3a).

Using the supplied Allen Wrench, insert four (4) M6x10 Machine Screws (part 10) through the holes in the Frame End-CB (part 3a), going into the leg (part 1) and rotate each screw just a few turns. After all four (4) M6x10 Machine Screws (part 10) are inserted, tighten all four (4) screws.

Do the same for the other Leg (part 1) and the Frame End (part 3b).

Note: If you drop a screw inside the frame end, simply tilt to retrieve.

Step 3

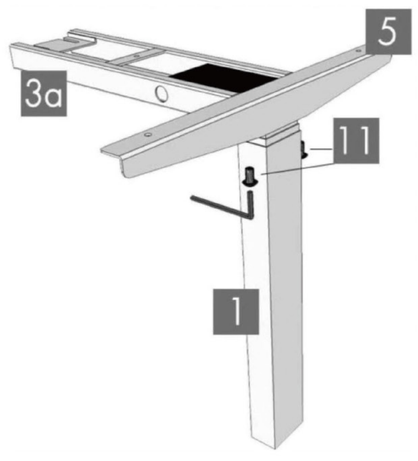

The Frame End-CB (part 3a) should be placed on the side of the desk where you plan to mount the Control Box (part 6) and the Handset (part 7).

Slide the Side Bracket (part 5) into the Frame End-CB (part 3a). Insert two (2) M6x14 Machine Screws (part 11) through the two (2) holes in the bottom of the Frame End (part 3a) going into the inserted Side Bracket (part 5). Using the supplied Allen Wrench, rotate each screw just a few turns. After both M6x14 Machine Screws are inserted, tighten both screws.

Do the same for the other frame end/leg assembly.

Step 4

Slide the two (2) Center Rails (part 4) into the two Frame Ends (parts 3a & 3b) ensuring:

a) the slots in the Center Rails (part 4) face inward

b) the slots in the Center Rails (part 4) are closer to the top edge when the assembly is upside down (see inset).

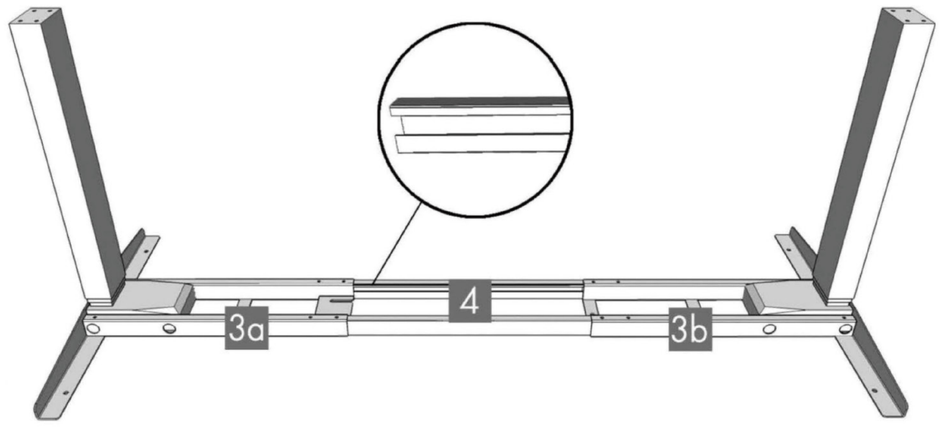

Step 5

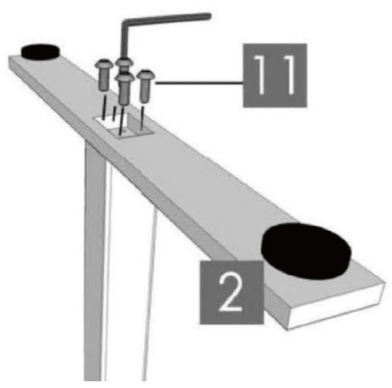

For each leg assembly, attach a Foot (part 2) with four (4) M6x14 Machine Screws (part 11) and tighten in a cross-pattern.

Step 6

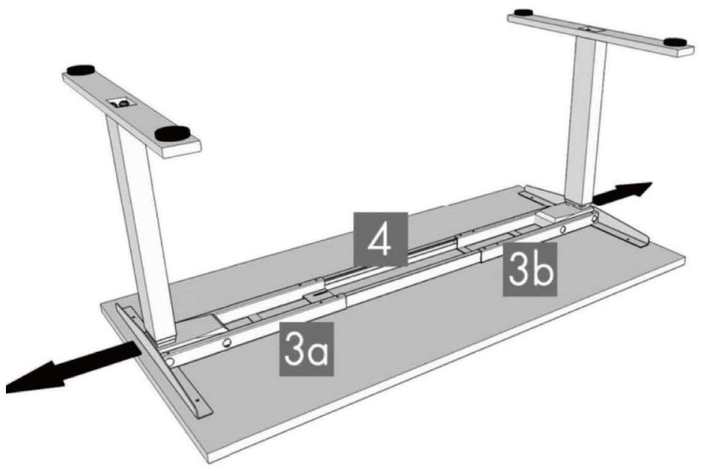

Lay out all components and hardware to ensure that you have all the components and hardware listed on the parts page.

Slide the Control Box (part 6) off the Frame End-CB (part 3a) and set aside. Fully separate Frame End (part 3b) from Frame End-CB (part 3a). You will find the Center Rails (part 4) inside.

Step 7

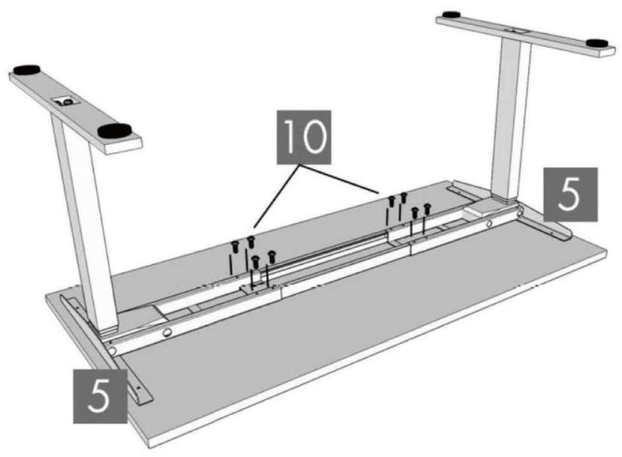

If the desktop is pre-drilled, perform Step 8 before Step 7.

If the desktop is not pre-drilled, lock the position of the Center Rails (part 4) using eight (8) M6x10 Machine Screws (part 10).

Warning: Ensure that the M6x10 Machine Screws (part 10) contacts the Center Rails (part 4) by sliding the Center Rails (part 4) as needed.

Step 8

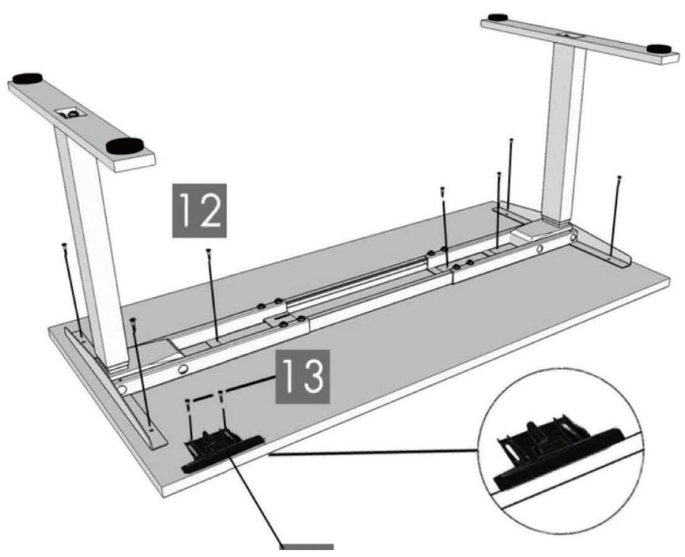

Warning: Double-check that the wood screws are not too long for your desktop and won't puncture the surface when screwed all the way in.

Note: We recommend that you pre-drill any holes needed for fasteners if your desktop is not pre-drilled. Never use countersunk screws.

Double-check that the desk base is properly positioned on the underside of the desktop.

Attach the desk base to the underside of the desktop using seven (7) M5x20 Wood Screws (part 12).

Attach the Handset (part 7) so the front of the handset is flush with the front desktop edge (or recessed up to 1/8"). The handset may be placed anywhere along the front edge of the desktop but we recommend placing it toward an end so it does not interfere with your chair when seated. Use two (2) M5x16 Wood Screws (part 13) to attach the handset to the desktop.

Warning: Do not overtighten screws in this step. Overtightening could cause damage to the components.

Step 9

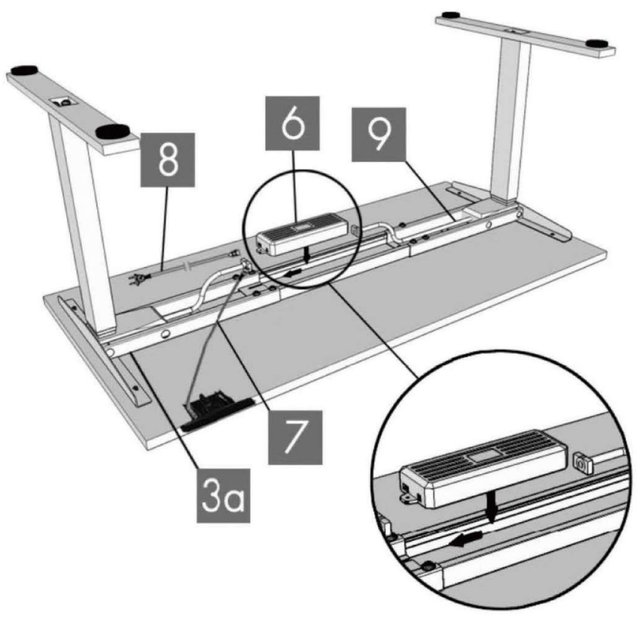

Slide the Control Box (part 6) onto the Frame End-CB (part 3a).

Connect the cable exiting the leg (part 1) that is attached to the Frame End-CB (part 3a) directly into the Control Box (part 6).

Connect the Cable (part 9) to the other Leg (part 1) and to the Control Box (part 6).

Connect the Handset (part 7) cable to the Control Box (part 6).

Connect the Power Cord (part 8) to the Control Box (part 6).

Use the adhesive-backed Cable Clips (part 14) to secure the cables so they do not sag.

ASSEMBLY

Step 10

Turn the assembled desk right-side up. With at least two people, grab the DESK BASE (not the desktop) and turn the desk right-side up. Adjust the pre-installed glides on the Feet (part 2) as needed.

Step 11

Plug the Power Cord (part 8) into a 230v outlet.

USE

Warning:

Make sure no obstacles are in the desk's path.

Make sure the desktop is not touching any walls.

Make sure all cords are appropriate length to accommodate the change in height.

IMPORTANT: You must RESET the desk prior to use.

RESET PROCEDURE: Press and hold the DOWN button on the Handset (part 7) until the desk reaches its lowest height. Release the DOWN button. Press and hold the DOWN button again until the LED display reads "RST" or about 10 seconds on non-LED handset models. Release the DOWN button. Press and hold the DOWN button again until the desk lowers a little bit more, slightly rises and stops. Release the DOWN button. Your desk is now ready to use.

The desk base can be adjusted by pressing and holding either the UP or DOWN button until the desired height is reached.

To program up to four presets (on some models): Use the up/down buttons to find a desired height, then press "M" followed by a number 1 - 4.

CAUTION: Once a preset button is pushed, the desk will move to the programmed height (see caution box above).

TROUBLE SHOOTING

If your desk is not functioning properly it may need to be reset. Follow the RESET procedure outlined in the USE section.

If your desk has a handset with an LED readout and it displays "RST" (reset), perform the reset procedure outlined in the USE section.

If the LED readout displays an error message ("Er1" - "Er13") confirm that all wired connections are secure (legs to cables, cables to control box). Then perform the reset procedure outlined in the USE section.

If the error message persists after the reset procedure, contact your seller.

If the height between the legs exceeds 1.5 inches, stop the reset procedure & contact your seller.

If the handset displays "HOT", let the base cool down for 20 minutes.

PROGRAMMING (some models)

Press the DOWN button on the Handset (part 7) until the base reaches its lowest position. Press and hold the DOWN button again until the LED display reads “RST”.

Press and hold the 1 button (about 5 seconds) while the LED flashes “RST” and then switches to either:

10.1 = One-Touch

10.2 = Constant-Touch

Release the 1 button. Press the 1 button again until the desired setting is reached. Once the chosen setting is displayed, release the button and wait about 5 seconds for the display to return to “RST”.

Finish the reset process by pressing and holding the DOWN button until the desk lowers a little bit more, slightly rises and stops. Release the button. The new program setting is saved and your desk is now ready to use.

SETTING THE LED RETRACTED HEIGHT (some models)

Press the DOWN button on the Handset (part 7) until the base reaches its lowest position. Measure the distance from floor to the top surface of the desktop. If the number on the LED display does NOT match your measurement, follow these steps:

Press and hold the DOWN button until the LED display reads “RST”. Press and hold the “M” button (about 5 seconds) until the LED displays the flashing height. (If the display returns to “RST” before the next step is taken, repeat this step.) Use the UP/DOWN buttons to change the value of the starting height so that it matches your measurement. Wait about 5 seconds and the display will return to “RST.”

Finish the reset process by pressing and holding the DOWN button again until the desk lowers a little bit more, slightly rises and stops. Release the button. The new starting height value is saved and your desk is now ready to use.

Note: the LED display has a ±0.1 tolerance.

SETTING THE UPPER & LOWER LIMITS (some models)

This base is designed to go to its minimum and maximum heights, allowing for the widest possible range. If you prefer to change the settings to a more narrow range, follow these steps:

Make sure the power is ON and a number reads in the LED display (if no number appears, please follow the Reset procedure described in the USE section).

To Set the Upper-Limit Position:

Use the UP/DOWN buttons to move the base to the desired maximum-height position. Press the “M” button and release. Press the UP button and release. The LED display will flash “S -”. Press and hold the “M” button (about 2 seconds) until the LED display changes to “999”. The display will automatically return to the selected height. The new upper limit is now set.

To Set the Lower-Limit Position:

Use the UP/DOWN buttons to move the base to the desired minimum-height position. Press the “M” button and release. Press the DOWN button and release. The LED display will flash “S -”. Press and hold the “M” button (about 2 seconds) until the LED display changes to “000”. The display will automatically return to the selected height. The new lower limit is now set.

To Remove the Upper/Lower Limit Positions:

Press and hold the “M” button until the LED display flashes “S -” and then release it. Within 5 seconds, press the “M” button again and hold for 2 seconds. The LED display will change to “555” and then automatically return to the height display. The upper and lower limits are now removed.

Warning: A RESET procedure requires the desk base to full retract (beyond any lower limit set). Please ensure that you have the proper clearance below the desk base.

After the upper and lower limits are set, the previous memory positions (1, 2, 3, 4) may be outside the new range of movement. If so, simply reset the memory positions.

If you attempt to revise a previously set upper or lower limit and it is outside of the existing range, you will need to remove the previously set upper/lower limits first.

HANDSET LOCK (some models)

To lock the handset:

Press and hold the “M” button (about 8 seconds) until the LED display switches to “S -” and then to “LOC.” Release the button.

To unlock the handset:

Press and hold the “M” button (about 8 seconds) until the LED switches from “LOC” to the height display. Release the button.

CHANGING INCHES TO CENTIMETERS (some models)

Press the DOWN button on the Handset (part 7) until the base reaches its lowest position. Press and hold the DOWN button again until the LED display reads “RST”.

Press and hold the 2 button (about 5 seconds) while the LED flashes “RST” and then switches to either:

10.3 = cm

10.4 = inches

Release the 2 button. Press and hold the 2 button again until the desired setting is reached. Once the chosen setting is displayed, release the button and wait about 5 seconds for the display to return to “RST”.

Finish the reset process by pressing and holding the DOWN button until the desk lowers a little bit more, slightly rises and stops. Release the button. The new measurement setting is saved and your desk is now ready to use.

CHANGING ANTI-COLLISION SENSITIVITY (some models)

Press the DOWN button on the Handset (part 7) until the base reaches its lowest position. Press and hold the DOWN button again until the LED display reads “RST”.

Press and hold the UP button (about 5 seconds) while the LED flashes “RST” and then switches to either:

10.5 = 10 kg pressure (most sensitive)

10.6 = 15 kg pressure (middle setting)

10.7 = 20 kg pressure (least sensitive)

Release the UP button. Press and hold the UP button again until the desired setting is reached. Once the chosen setting is displayed, release the button and wait about 5 seconds for the display to return to “RST”.

Finish the reset process by pressing and holding the DOWN button until the desk lowers a little bit more, slightly rises and stops. Release the button. The new anti-collision sensitivity setting is saved and your desk is now ready to use.

02380 240 398
India.hsbc@microlinkpc.com

microlinkpc.com
Registered Number: 03325643
Vat No: 927583587